NOTES: (UNLESS OTHERWISE SPECIFIED):
1. DO NOT SCALE THIS DRAWING.
2. REMOVE BURRS & SHARP EDGES.
3. IDENTIFY WITH P/N & APPLICABLE SUFFIX.

4. LUBRICATE 'O' RINGS AT ASSEMBLY WITH ITEM (20)

5. SLEEVE REQUIRED TO BE DETERMINED BY FOG NOZZLE CAPACITY IN G.P.M. — USE 100790-GPM FOR COMPUTER ONLY.

6. NAMEPLATE REQUIRED TO BE DETERMINED BY FOG NOZZLE CAPACITY IN G.P.M. — USE 102381-GPM FOR COMPUTER ONLY.

7. HYDRAULIC OPERATION: RECOMMENDED WORK PRESSURE: 250-400 PSI.
MAX WORKING PRESSURE: 500 PSI.

8. DELETED

9. USE SHORT SLEEVE ITEM (26) WITH REMAINING SLEEVES ITEM (4) WITH .51 D HOLES. THEN THE SHORT & LONG SLEEVES ITEM (24) (25) (26) ARE VOIDED, ALSO NOTE (6)

10. DELETED "Y" CHG.

11. OPTIONAL SPACER: FOR STOPING DOWN TO STRAIGHT STREAM. TO BE SPECIFIED ON S/O IF REQUIRED. (REF. .190 LG SPACER #B103941-1) FOR NON-SHUT OFF ONLY. (OSHKOSH TRUCK PROJ #0031-2,5)

12. DELETED!

13. ADD 2-ITEM (18) WASHERS TO MAKE -11, -31 & -51 NON-SHUTOFF NOZZLE

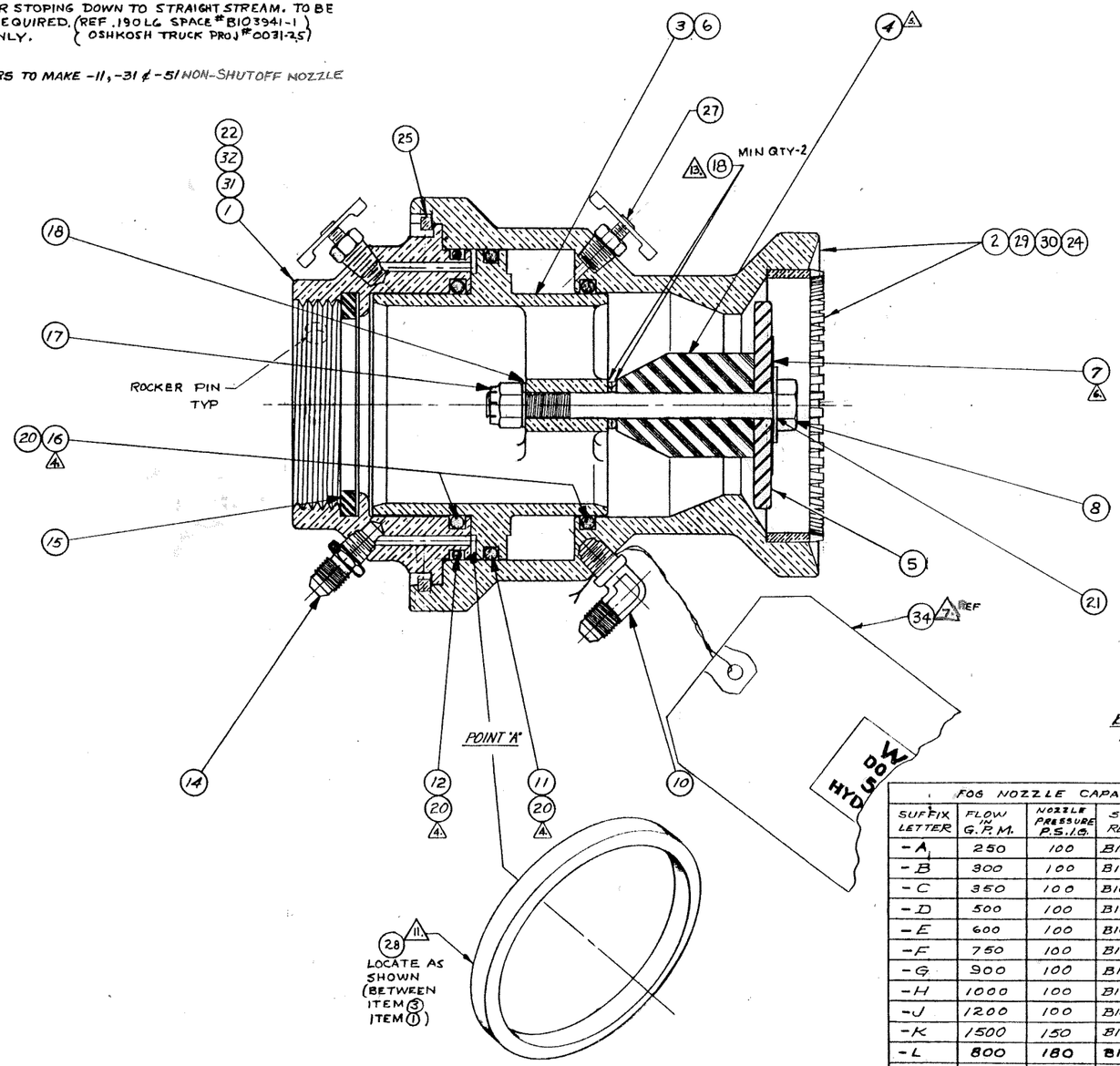

NOTE: HYDRAULIC FLUID REQ FOR FULL STROKE IS 7.395 CU. IN. (.032 GAL/STROKE)

LTR	REVISIONS	DATE	BY
W	ADDED ITEM (21); ITEM (18) WAS MS15795-814, QTY'S WAS 2 & 4 EA NOW 1 & 3.	10-22-86	Rutmc OBS
X	ADDED BACK ITEM (34) & NOTE (12). PSI. ITEMS (10) & (14) WERE BOTH -61 CRES NOW -1 BRASS	11-20-86	Rutmc N/F
Y	ADDED -61 & -71 NICKEL PLT'D ASSY; DELETED ITEMS (9), (21) NOTES (8) & (10).	7-10-87	Rutmc OBS
Z	ADDED TEFLON COATED -81 & -91 DELETED ITEM (23)	3-29-88	Rutmc OBS
AA	ADDED NOTE (8)	10-27-89	Rutmc N/F
AB	DELETED ITEMS (6), (22) & (24); WERE P/N'S C103416-5, -1, & -7 RESP. ITEMS (29), (30) WERE P/N D100494-2, -5 RESP. ADDED NEW ITEMS (6), (22) & (24).	7-26-94	GH OBS

LTR	REVISIONS	DATE	BY
F	REVISED & REDRAWN	8-18-75	CDL
G	REVISED ADDING NOTES (7) THRU (10) & ITEMS (22) THRU (27). DELETED ITEM (21) P100287-21 INDUR BOLT	6/22/77	Rutmc
H	ITEM (17) WAS: P100249-11. ADDED P/N TO ITEM (8)	10-9-79	Rutmc
J	ADDED -L & -M	10-24-80	Rutmc
K	ADDED ITEM (28) & NOTE (11)	9-2-81	Rutmc
L	SHT 1 REMOVED BASIC MODEL & MODEL DESCRIPTIONS & ADDED ASSY. & SUFFIX DESCRIPTIONS. SHT 2 REVISED P/N OF ITEM 2; REVISED ITEM 13 & ADDED ITEM 21; ADDED ITEMS 29 THRU 32 & FOG NOZZLE SUFFIX LETTERS M & P; ADDED ASSYS. 21 THRU 51 & NOTE 12., DELETED ITEM 6 (REF: C103416-11)	4-28-82	TAZ
M	ITEM 27 QTY WAS 1	7-17-82	TAZ
N	SHT 1: ADDED NOTE 6; SHT 2: DELETED NOTE 7 & ITEM 22. ADDED NOTE 13	2-25-83	TAZ
P	ADDED ITEM (6) 103416-5, ITEM (24); ITEM (29) (30) WAS: C104054-11, -21 RESP. DELETED NOTES (7) (8) (9) (10).	7-18-83	Rutmc OBS.
Q	ADDED ITEM 33 & SLEEVE DASH NOS.	8-17-83	Rutmc OBS
R	DELETED ITEM 19 (D101614-11). ADDED ITEM 3 TO -11, -31 & -51 ASSY'S ITEM 18 REQ 1 CHANGED TO REQ 4.	5/30/84	4
S	ADDED NOTE (13), ITEM (8) WAS: P102473-425C ITEM (18) WAS QTY 4 FOR -11, -31, -51	1/22/85	JS OBS
T	ITEM (22) REISSUED ADDING C103416-11 RING ADDED ITEM 3 TO -11, -31, -51 ASSY'S	3-4-85	Rutmc OBS
U	ADDED ITEM (34) A104279-1 TAG	3-14-85	Rutmc OBS
V	DELETED ITEM (13), (21) (33), (34), NOTE (12) ITEM (22) WAS C103416-11	8-6-85	Rutmc 0002-85

	1	1	1	1	1	1	1	1	1	1	A104279-1	34	TAG, "500 PSI"	REF CARD	
	—	—	—	—	3	3	3	3	/	/	P104030-250	33	SCREW, SOC. HD CAP #10-24UNC-3A X .25LG	REF CRES	
	/	/	/	/	1	1	/	/	/	/	D100496-4	32	INLET (CHROME)	REF. BRZ.	
	/	/	/	/	/	/	1	1	/	/	D100496-2	31	INLET (POLISHED)	REF. BRZ	
	/	/	/	/	1	1	/	/	/	/	C104054-21	30	BODY W/RING (CHROME)	REF. BRZ.	
	/	/	/	/	/	/	1	1	/	/	C104054-11	29	BODY W/RING (POLISHED)	REF BRZ.	
OPTIONAL (11)	/	1	/	1	/	1	/	1	/	1	B103807-1	28	SPACER RING .50LG STRAIGHT STREAM ONLY.		
	2	2	2	2	2	2	2	2	2	2	P100235-4	27	PETCOCK, .125-27NPT		
DELETED	—	—	—	—	/	/	/	/	1	1	~~-26~~	~~26~~	~~TUBING, .500D X .402ID X 1.875 LG~~	~~CRES~~	
	1	1	1	1	1	1	1	1	1	1	B104294-1	25	RING, RETAINING (.187 SQ SEC.)	REF: BRASS	
	1	1	/	/	/	/	/	/	/	/	C104054-31	24	BODY W/RING (TEFLON)	REF: BZ	
DELETED			1	/	/	/	/	/	/	/		23			
	1	1	/	/	/	/	/	/	/	/	D100496-6	22	INLET (AS CAST/TEFLON)	REF: BZ	
(1)	1	1	1	1	1	1	1	1	1	1	P100064-4	21	WASH, FLAT .38 NOM 1.00 OD X .438 ID X .06	REF: CRES	
	A/R	A/R	N/R	A/R	A/R	A/R	A/R	A/R	A/R	A/R	P103087-1	20	SILICONE GREASE		
DELETED	—	—	—	—	/	/	/	/	/	/	~~D101614-11~~	19	~~PISTON W/O NOSE~~		
(13) (1)	1	3	1	3	1	3	1	3	1	3	P101715-38C	18	WASHER, FLAT .38 NOM (AN960C616 ALT.)	REF: CRES	
(1)	1	1	1	1	1	1	1	1	1	1	P101875-38C	17	HEX LOCKNUT, 3/8-16 UNC-2B (FLEXLOC)	REF: CRES	
'O'→	2	2	2	2	2	2	2	2	2	2	P100128-339	16	'O' RING, .210 ϕ X 3.225 ID X 3.645 OD	REF: BUNA-N	
	1	1	1	1	1	1	1	1	1	1	B100275-1	15	GASKET (NEO) (ALT. B100275-4 PROPYLENE, HARD)		
	1	1	1	1	1	1	1	1	1	1	P101816-1	14	ADAPTER, 1/8-27 NPT x 7/16-20 UNF	REF: BRASS	
DELETED	—	—	—	—	~~4~~	~~4~~	~~4~~	~~4~~	~~4~~	~~4~~	~~P100037-27~~	~~13~~	~~LOCK WASHER INTERNAL TOOTH FOR 1/4 BOLT~~	~~REF CRES~~	
'O'→	1	1	1	1	1	1	1	1	1	1	P100128-244	12	'O' RING, .139 ϕ X 4.234 X 4.512 OD	REF: BUNA-N	
'O'→	1	1	1	1	1	1	1	1	1	1	P100128-346	11	'O' RING, .210 ϕ X 4.100 ID X 4.520 OD	REF. BUNA-N	
	1	1	1	1	1	1	1	1	1	1	P101822-1	10	90° ADAPTER, 1/8-27 NPT x 7/16-20 UNF	REF. BRASS	
DELETED	—	—	—	—	~~1~~	~~1~~	~~1~~	~~1~~	~~1~~	~~1~~	~~P100128-110~~	~~9~~	~~'O' RING, .362 ID X .568 OD X .103 ϕ~~	~~REF: BUNA-N~~	
(1)	1	1	1	1	1	1	1	1	1	1	P102473-428	8	CAP SCREW, HEX. HD, 3/8-16 UNC X 4.25	REF: CRES	
(6)	1	1	1	1	1	1	1	1	1	1	102381-GPM	7	NAMEPLATE		
	1	1	/	/	/	/	/	/	/	/	D101614-2	6	PISTON (AS CAST/TEFLON)	REF: BZ	
(1)	1	1	1	1	1	1	1	1	1	1	B100736-1	5	POPPET	REF: CRES	
(5) (1)	1	1	1	1	1	1	1	1	1	1	100790-GPM	4	SLEEVE	REF: BRONZE	
	/	/	1	1	1	1	1	1	1	1	D101614-1	3	PISTON	REF: BRONZE	
	/	/	1	1	/	/	/	/	1	1	C104054-1	2	BODY, SUB-ASSY W/RING (AS CAST)	BRONZE	
	/	/	1	1	/	/	/	/	1	1	D100496-1	1	INLET (AS CAST)	REF: BRONZE	
	QTY	QTY	QTY	QTY	QTY	QTY	QTY	QTY	QTY	QTY	PART NO.	ITEM	NOMENCLATURE:	MATERIAL	
KIT D100498-101	D100498-91	D100498-81	D100498-71	D100498-61	D100498-51	D100498-41	D100498-31	D100498-21	D100498-11	D100498-1					
	TEFLON	N.S. TEFLON	NICKLE	N.S. NICKLE	CHROME	N.S. CHROME	POLISHED	N.S. POLISHED	AS CAST	N.S. AS CAST					

NON-SHUTOFF = NS

REPAIR KIT SOFT GOODS: A104064-1

FOG NOZZLE CAPACITY (5) (6)				
SUFFIX LETTER	FLOW IN G.P.M.	NOZZLE PRESSURE P.S.I.G.	SLEEVE REQUIRED	NAMEPLATE REQUIRED
-A	250	100	B100790-14A	B102381-2
-B	300	100	B100790-13	B102381-7
-C	350	100	B100790-14	B102381-3
-D	500	100	B100790-12	B102381-4
-E	600	100	B100790-15	B102381-7
-F	750	100	B100790-11	B102381-5
-G	900	100	B100790-9A	B102381-7
-H	1000	100	B100790-10	B102381-6
-J	1200	100	B100790-16	B102381-7
-K	1500	150	B100790-16A	B102381-7
-L	800	180	B100790-15A	B102381-7
-M	400	100	B100790-12A	B102381-7SPL
-N	850	100	B100790-10A	B102381-7SPL.
-P	660	100	B100790-13A	B102381-7SPL.

SUFFIX	QTY.	NEXT ASSY.	END ITEM / FINAL ASSY.
APPLICATION			

UNLESS OTHERWISE SPECIFIED
DIMENSIONS ARE IN INCHES
TOLERANCES: .X ±.1, .XX ±.03, .XXX ±.010, ANGULAR ±2°
ALL MACHINED SURFACES ✓ ARITHMETIC AVERAGE
HEAT TREAT:
PROTECTIVE FINISH: —

STANG HYDRONICS, INC.
MANUFACTURING DIVISION
ORANGE, CALIFORNIA CODE IDENT. 13189

FOG NOZZLE — 2.50 NOM. DIA.
HYDRAULIC REMOTE CONTROL

TOP ASSY
REF NO. 0002
SHEET 2 OF 2
DATE 8-15-75 DRAWN CDL
SCALE 1/1 DESIGN M.B.
CHECKED
APPROVED
DRAWING NO. D100498
REV. AB

REF SH 1 IS 'C' SIZE